CHART 71914

REVISIONS				
ZONE	REV.	DESCRIPTION	DATE	APPROVED
	A	RELEASED TO PRODUCTION. EC#---- R.R.S. 8-4-94	9-29-94	R.STUTZ
	B	1) CHARTED 71914-JH. EC#7735 G.W. 7-18-95	7-19-95	C.STIRLING
	C	1) MAT'L WAS 10 GAGE HRS/CRS EC#78860 JPP 3-6-03	4-4-03	M.KIEFFER
	D	1) MAT'L WAS 11 GAGE GALVANEALED STEEL. EC#78981 JPP 6-26-03	6-27-03	M.KIEFFER

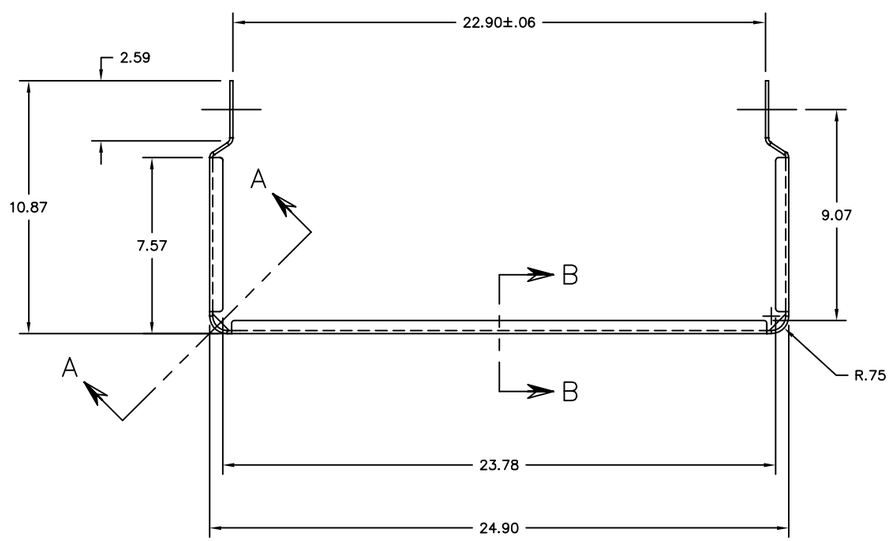

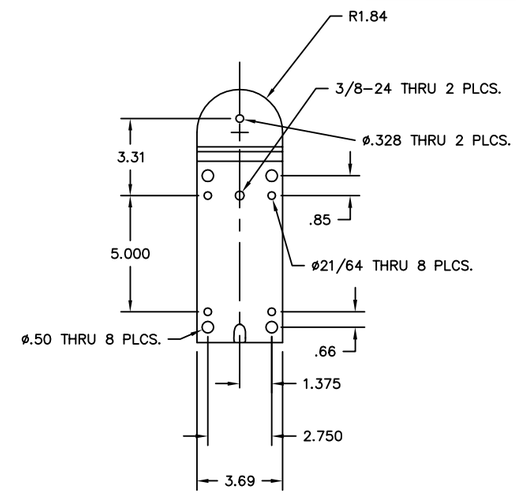

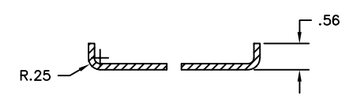

SECTION B-B
2x SCALE

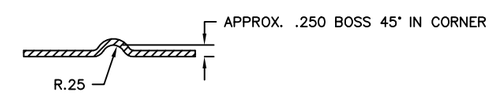

SECTION A-A
2x SCALE

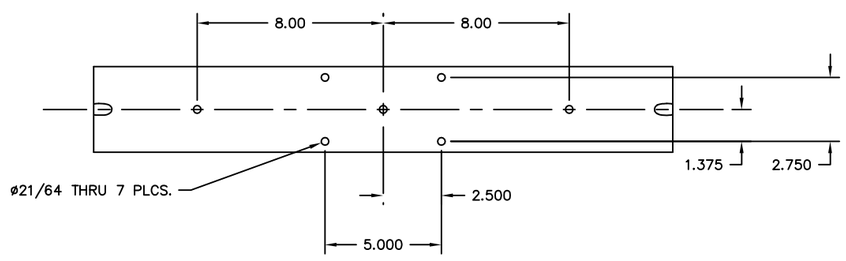

PART NO.	TYPE OF FINISH
71914-JH	WHITE WRINKLE POWDER COAT, GFW-600W2
71914-JF	BLACK WRINKLE POWDER COAT, CFB-600W3
71914	NONE

THIS PRINT IS THE SAME AS ILLUSTRATED BUT THE END FINISH MUST CONFORM AS INDICATED BY THE ABOVE SUFFIX.

DIMENSIONAL TOLERANCES - UNLESS OTHERWISE SPECIFIED

INCHES	METRIC (PAREN.)	ANGLES	
.XX ±.01 .XXX ±.005	.X ±.3mm .XX ±.10mm	MACHINED / CAST / MOLDED ±0°30'	FORMED±2°

- NOTES -
UNMARKED ANGLES AND INTERSECTIONS 90°.
REMOVE BURRS AND EXPOSED SHARP EDGES.
THREADS TO BE UNIFIED SERIES CLASS 2
AFTER PLATING UNLESS OTHERWISE SPECIFIED.
THIS DRAWING INTERPRETED PER ANSI STD. 14.5Y.

CONCENTRICITY ~ T.I.R.
DRAFT ANGLE ~

DO NOT SCALE DRAWING

FROM
MATERIAL 10 GAGE (0.134) HRS/CRS

		DATE
DRAWN	R.STUTZ	8-4-94
CKD	B.MUELLER	8-22-94
ENGR	R.STUTZ	9-29-94
RELEASED	R.STUTZ	9-29-94

ELECTRO-VOICE, INC.
a MARK IV company
ENGINEERING RESEARCH AND DEVELOPMENT CENTER
128 E. FRONT ST. • BUCHANAN, MICH. 49107

INSTALLATION BRACKET

SIZE		PART NO.	REV.
C	MB200	CHART 71914	D

SCALE 1:4 FILE NO. 71914.DWG SHEET NO. 1 OF 1