Electro-Voice

ZX1i Series Loudspeaker

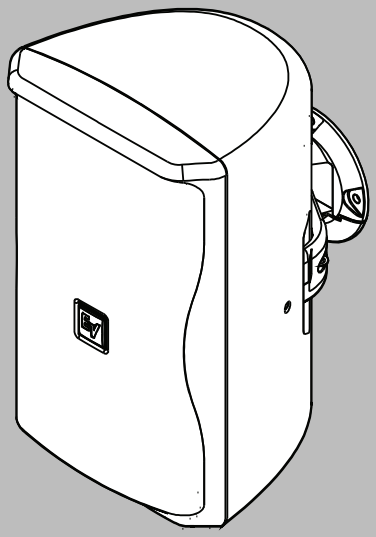

en Installation Manual

Table of contents

1	**Description**	**4**
1.1	Applicable products	**4**
1.2	Parts included	**4**
1.3	System features	**5**
1.4	System overview	**6**
2	**Installation and wiring**	**7**
2.1	QuickSAM™ (Strong-Arm-Mount™) system	**7**
2.2	Step by step installation	**7**
2.2.1	Mounting the QuickSAM™ bracket to the mounting surface	**7**
2.2.2	Selecting the voltage tap	**9**
2.2.3	Selecting the horn dispersion orientation	**9**
2.2.4	Attaching the speaker to the QuickSAM™ bracket	**11**
2.2.5	Wiring the speaker	**12**
2.2.6	Securing the seismic tab connection point	**12**
2.2.7	Testing system operation	**12**
2.3	Detaching the speaker from the QuickSAM bracket	**14**
3	**Troubleshooting**	**15**
4	**Maintenance**	**17**
4.1	Cleaning	**17**
4.2	Painting	**17**
5	**Technical data**	**18**

1 Description

1.1 Applicable products

This manual is applicable to these products:

CTN	Description
ZX1i-90_HE	8" 2-way passive speaker install, black
ZX1i-90W_HE	8" 2-way passive speaker install, white
ZX1i-90T_HE	8" 2-way passive TransformerInstallBlack
ZX1i-90TW_HE	8" 2-way passive TransformerInstallWhite
ZX1i-100_HE	8" 2-way passive speaker install, black
ZX1i-100W_HE	8" 2-way passive speaker install, white
ZX1i-100T_HE	8" 2-way passive TransformerInstallBlack
ZX1i-100TW_HE	8" 2-way passive TransformerInstallWhite

1.2 Parts included

Make sure that all parts are included and not damaged. If the packaging or any parts are damaged, contact your shipper. If any parts are missing, contact your Sales or Customer Service Representative.

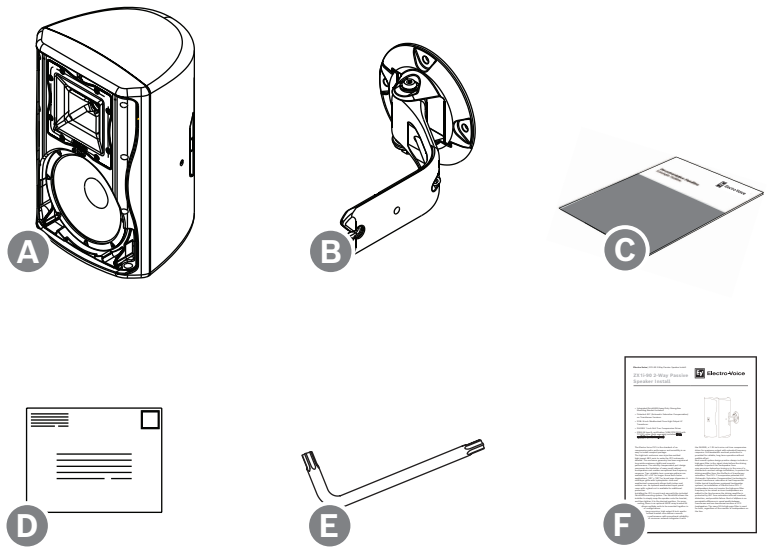

Figure 1.1: ZX1i parts included

A	Speaker system	B	QuickSAM™ assembly
C	Installation manual	D	Warranty card
E	QuickSAM™ mounting tool	F	ZX1i datasheet

1.3 System features

All ZX1i models use an 8-inch high-excursion LF driver and a 1-inch exit titanium compression driver on a rotatable horn to provide high-fidelity, full-range sound over a wide coverage area. The system also features the exclusive QuickSAM™ mounting system for easy mounting and aiming.

ZX1i-90_HE, ZX1i-90W_HE

- 90° x 50° rotatable horn
- Black or white models
- Phoenix input connector

ZX1i-90T_HE, ZX1i-90TW_HE

- 90° x 50° rotatable horn
- 100 W transformer with 8-ohm bypass and Automatic Saturation Compensation (ASC)
- Black or white models
- Phoenix input connector

ZX1i-100_HE, ZX1i-100W

- 100° x 100° horn
- Black or white models
- Phoenix input connector

ZX1i-100T_HE, ZX1i-100TW_HE

- 100° x 100° horn
- 100 W transformer with 8-ohm bypass and Automatic Saturation Compensation (ASC)
- Black or white models
- Phoenix input connector

Note: Automatic Saturation Compensation (ASC™) eliminates distortion and saturation at high volume levels, and an 8-ohm bypass switch adds flexibility.

1.4 System overview

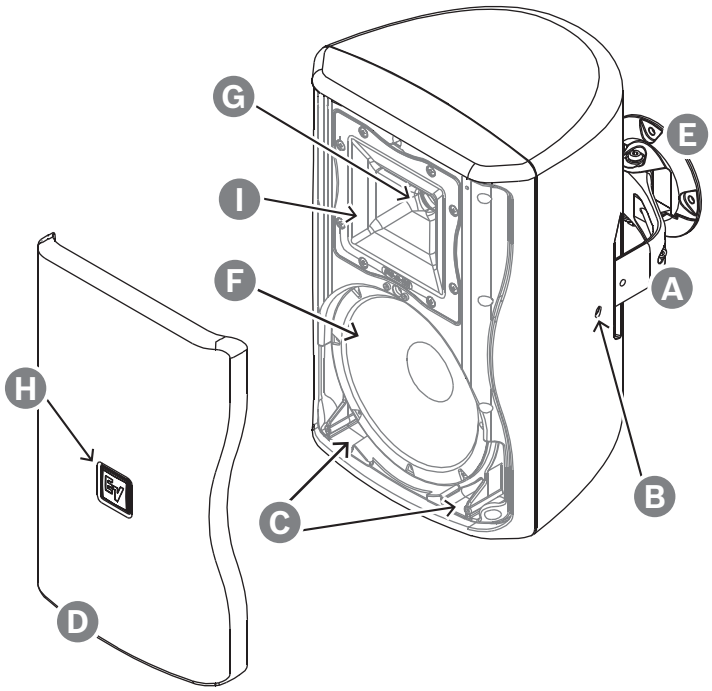

Figure 1.2: ZX1i system overview

A	Sweep adjustment bolt (socket head bolt A)	B	Enclosure attachment and rotation adjustment bolt (socket head bolt B)
C	Dual low-frequency ports	D	Durable zinc-alloy steel grille
E	Cast aluminum Quick Strong-Arm-Mount™ (QuickSAM™)	F	8-in. woofer with weatherized treated cone
G	1-in. exit EV compression driver	H	Rotatable logo badge
I	Rotatable waveguide horn		

2 Installation and wiring

2.1 QuickSAM™ (Strong-Arm-Mount™) system

To mount a speaker system with the QuickSAM™ system (Strong-Arm-Mount™):

1. Securely attach the surface bracket to the wall or ceiling.
2. Click the ZX1i™ enclosure onto the bracket.
3. Aim the enclosure and tighten both bolts.

Warning!
Tighten socket head bolt B. Refer to *System overview, page 6*. Failure to tighten socket head bolt B may allow the speaker to disengage from the QuickSAM™ bracket, possibly resulting in serious injury.

Refer to

– *System overview, page 6*

2.2 Step by step installation

2.2.1 Mounting the QuickSAM™ bracket to the mounting surface

Warning!
It is the installer's responsibility to ensure that the mounting surface is stable and can support more than the speaker's weight.

Caution!
Touching uninsulated terminals or wiring may result in an unpleasant sensation.

To mount the QuickSAM™ bracket to the mounting surface:

– Use only industry-accepted fasteners and mounting methods when mounting the bracket.
– Consult an expert if you are not sure.
– Read *Selecting the voltage tap, page 9* and *Selecting the horn dispersion orientation, page 9* before attaching the speaker.
– For standard vertical installation, mount the QuickSAM™ bracket as shown.
– For horizontal mounting configurations, mount the bracket on the bottom side. This allows the speaker to be mounted closer to the ceiling.

Vertical mounting

Horizontal mounting

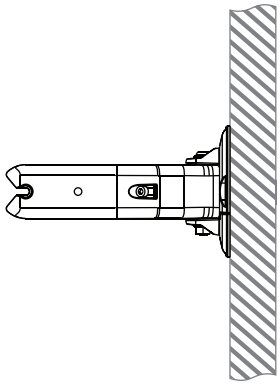

70° rotation range

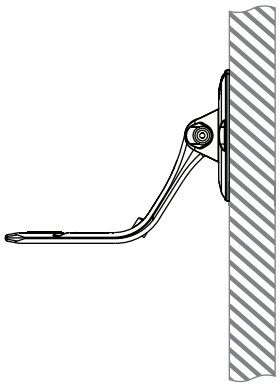

90° sweep range

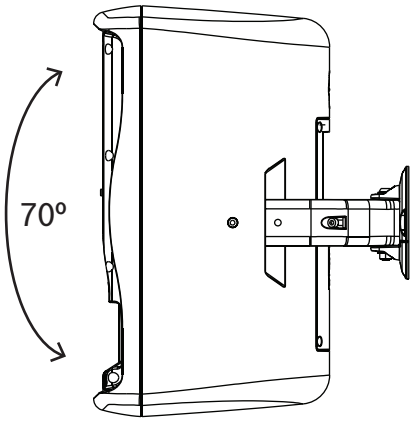

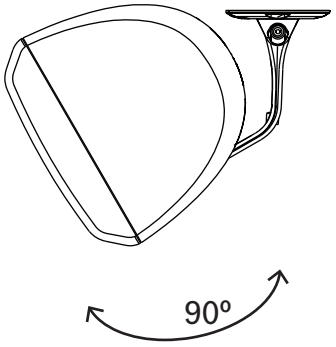

Refer to

- *Selecting the voltage tap, page 9*
- *Selecting the horn dispersion orientation, page 9*

2.2.2 Selecting the voltage tap

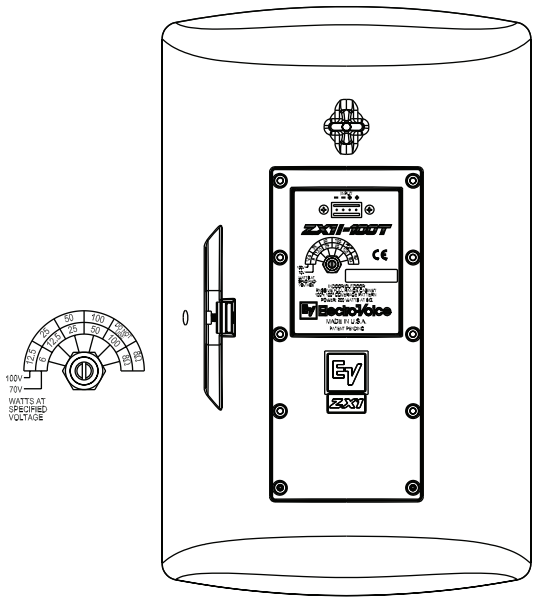

Figure 2.1: Voltage tap selector (ZX1i-90T and ZX1i-100T models only)

Selecting the voltage tap applies only to ZX1i-90T and ZX1i-100T models.

Before attaching the speaker to the bracket:

- Select the proper voltage tap setting for your installation.

The voltage selector switch is located at the rear of the speaker below the input terminal panel. A rotary switch on the back panel selects the taps.

Available voltage taps:

At 100 V:		12.5 W	25 W	50 W	100 W
At 70.7 V:	6 W				

There is also an 8-ohm bypass setting.

A guide on the back of each speaker shows which switch positions to use for the power settings at 70 V and 100 V.

2.2.3 Selecting the horn dispersion orientation

For the 90° x 50° horn version you may rotate the horn assembly for more effective coverage, depending on the orientation of the speaker cabinet in your installation. The horn is factory-installed with the 90° coverage in the horizontal plane and the 50° coverage in the vertical plane.

To rotate the horn:

1. Remove the logo badge.
2. Remove the grille mounting screws.
3. Remove the steel grille.
4. Remove the horn mounting screws.
5. Rotate the horn 90°.
6. Secure the horn back to the baffle with the horn mounting screws.
7. Secure the steel grille to the baffle with the grille mounting screws.
8. Secure the logo badge back onto the steel grille.

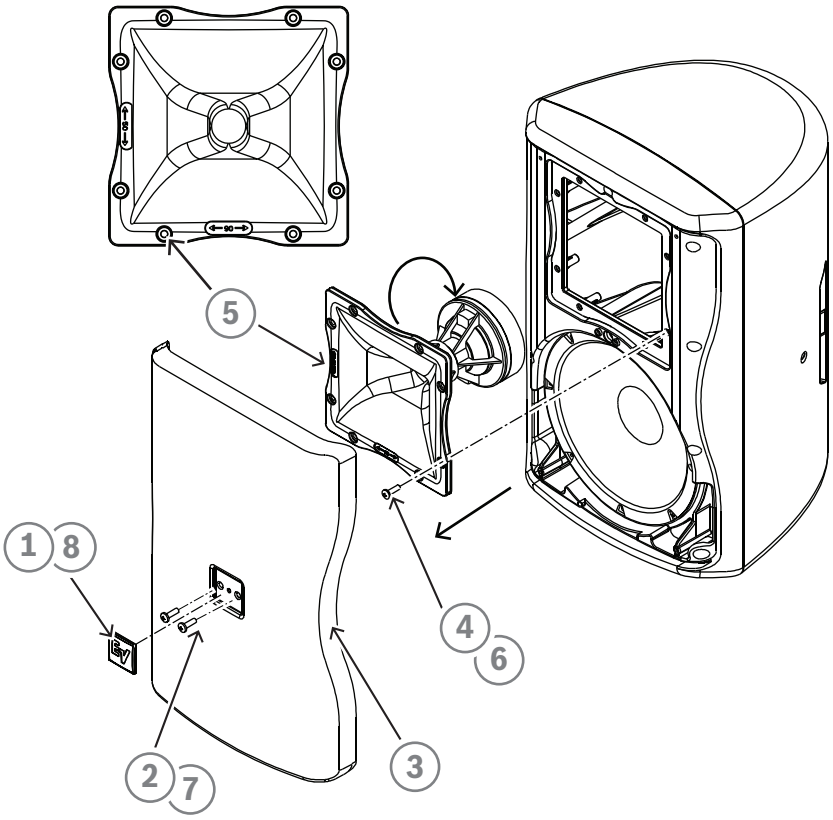

Figure 2.2: Horn rotation (90° x 50° models only)

2.2.4 Attaching the speaker to the QuickSAM™ bracket

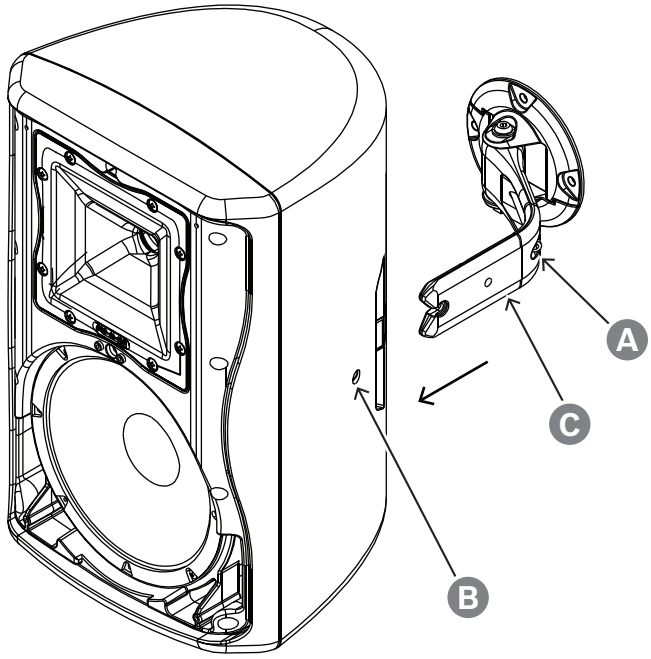

Figure 2.3: Attaching the speaker to the QuickSAM™ bracket

To attach the speaker to the QuickSAM™ bracket:

1. Insert the QuickSAM™ bracket (C) into the slot on the side of the speaker until it “clicks” in place.
2. Using the provided mounting tool, tighten the two socket head bolts (A and B) enough to allow aiming.
3. Select the proper horizontal angle and secure the sweep axis by tightening the socket head bolt A.
4. Select the proper vertical angle and secure the rotation axis by tightening the socket head bolt B.
   To tighten the recessed socket head bolt B, insert the mounting tool through the hole on the side of the speaker.

Warning!
The socket head bolt B is what secures the speaker to the QuickSAM™ bracket. It is the installer’s responsibility to ensure that the bolt is fully tightened. Failure to tighten the bolt may allow the speaker to disengage from the QuickSAM™ bracket, possibly resulting in serious injury. Use of seismic restraint is highly recommended. Refer to *Securing the seismic tab connection point, page 12*.

Refer to

– *Securing the seismic tab connection point, page 12*

2.2.5 Wiring the speaker

Caution!
Touching uninsulated terminals or wiring may result in an unpleasant sensation.

To wire the speaker:

1. Connect the wires to the speaker using the detachable 4-pole Phoenix connector.
2. Strip back the wire insulation and ensure that no bare wire is exposed beyond the Phoenix connector.
   The four connections allow for convenient loop through wiring to the next speaker system wired in the system.

2.2.6 Securing the seismic tab connection point

The rear of the enclosure includes an eyebolt for connection to a seismic restraint.

To secure the seismic tab connection point:

1. Connect the eyebolt in the rear of the enclosure to a properly rated hardware fitting that is securely installed independently of the QuickSAM™ bracket.
2. Maintain a 12-inch (305 mm) maximum length of slack or less.

Notice!
Even if your local construction code does not require the installation of a secondary support, its use is highly recommended as additional security.

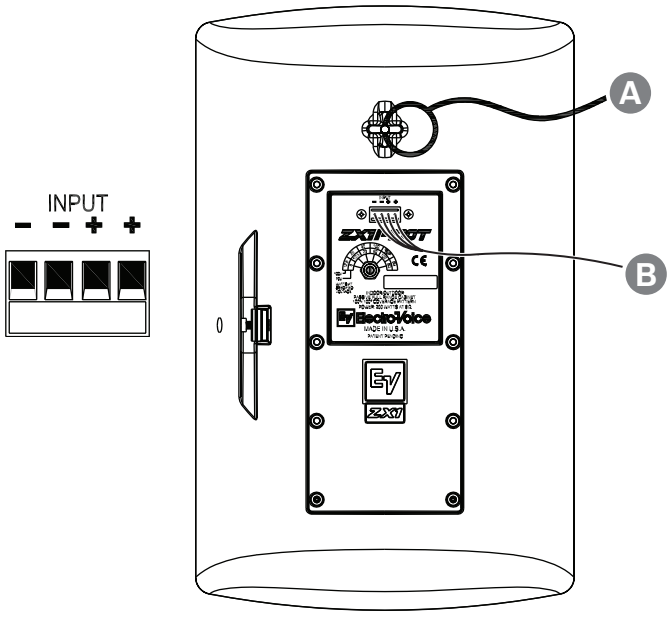

Figure 2.4: Wiring and seismic tab connections

A	Seismic security cable	B	Phoenix connector and wires

2.2.7 Testing system operation

After all connections are made:

- Test the complete system operation.

Refer to *Troubleshooting, page 15* for assistance in locating many speaker-related problems.

Refer to

– *Troubleshooting, page 15*

2.3 Detaching the speaker from the QuickSAM bracket

To detach the speaker from the QuickSAM bracket:

1. Loosen the socket head bolt B. Refer to *System overview, page 6*.
2. Press in the mounting tab while pulling the speaker away from the mounting surface.
   Press in the mounting tab with the included mounting tool.
   Or
   Press in the mounting tab by hand.

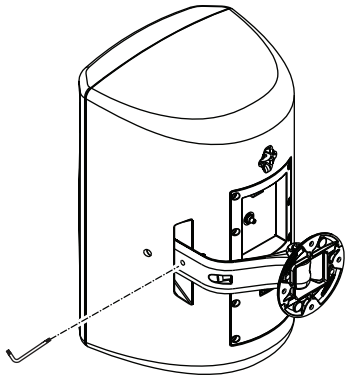

Detaching the speaker from the QuickSAM™ with the mounting tool

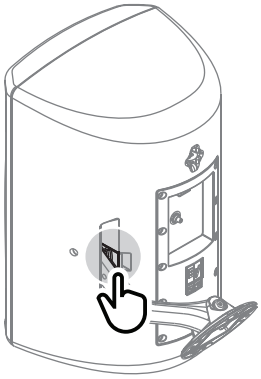

Detaching the speaker from the QuickSAM™ by hand

Refer to

– *System overview, page 6*

3 Troubleshooting

Problem		Possible causes(s)	Action
1	No sound	Amplifier	Connect a known working test speaker to the amplifier outputs. If there is no sound, check that all the electronics are on, the signal routing is correct, the source is active, the volume is turned up, and so on. Correct/repair/replace as necessary. If there is sound, the problem is in the wiring.
		Wiring	Verify that you have connected the correct wire pairs to the amplifier. Play something at low level through the amplifier (for example, from a CD player or tuner). Connect the test speaker in parallel with the malfunctioning line. If the sound level has gone or is very weak, the line has a short in it (possibly a severe scrape, pinch, or staple puncture). If the sound level is normal, the wire is open (possibly a cut wire or a missed connection). Using the test speaker, move down the line and test each connection/junction until you find the problem and correct it. Observe proper polarity.
2	Poor low-frequency response	Speakers wired out-of-polarity	When two speakers are connected out of polarity (out-of-phase), the low frequencies will cancel each other acoustically. Carefully observe the wire markings or tracers on your speaker wires. Verify that the amplifier (+) terminal is connected to the red speaker terminals and the

Problem		Possible causes(s)	Action
			amplifier (-) terminal is connected to the black speaker terminals.
3	Intermittent output such as crackling or distortion	Faulty connection	Check all connections at amplifier and speakers to ensure that they are all clean and tight. If the problem persists, it may be in the amplifier or wiring. Refer to Problem 1.
4	Constant noise such as buzzing, hissing, humming	Defective amplifier or other electronic device	If the noise is present but no program material is playing, the likely cause is the signal chain in the electronics. Evaluate each component as necessary to isolate the problem.
		Poor system grounding or ground loop	Check and correct the system grounding, as required.
If these suggestions do not solve your problem, contact your nearest Electro-Voice dealer or Electro-Voice distributor.			

4 Maintenance

The ZX1™ system has been designed and manufactured to provide years of durability and reliable service. No routine maintenance is necessary.

4.1 Cleaning

To clean the speaker:

- Wipe with a soft, damp cloth.

Caution!
Cleaning the cabinet and grille
Do not use abrasives such as sandpaper or steel wool. Never use gasoline, kerosene, acetone, MEK, paint thinner, harsh detergents, solvents or other chemicals, as these agents may cause permanent damage to the enclosure.

4.2 Painting

The ZX1™ is made of high-impact polystyrene, which accepts a wide variety of paints.

To paint the speaker:

1. Remove the grille and mask the baffle.
2. Clean the cabinet and grille by rubbing the speaker with a lightly dampened cloth.
3. Apply latex or enamel paint. Spraying is recommended.

Caution!
Painting the grille
Painting the grille requires spray painting. If the grille is rolled or brush painted, the mesh may become clogged with paint and poor sound quality may result.

5 Technical data

Frequency response (-3 dB)[1]:	60 Hz - 20 kHz
Frequency range (-10 dB)[1]:	48 Hz - 20 kHz
Rec. hi-pass frequency:	40 Hz
Axial sensitivity[1]:	94 dB (1W/1m)
Axial sensitivity[1]:	82 dB (1W/4m)
Max calculated SPL (1m)[1]:	123 dB
Max calculated SPL (4m)[1]:	111 dB
Coverage (H x V):	90 x 50
Rated system power:	200 W cont.[2], 400 W prog., 800 W peak
LF transducer:	EV8L, 203 mm (8 in) driver
HF transducer:	DH2005, 25 mm (1 in) exit compression driver
Crossover frequency:	1.7 kHz
Nominal impedance:	8 Ω
Minimum impedance:	6 Ω
“T” version transformer taps rated impedance:	**100 V**: 12.5W - 800Ω 25W - 400Ω 50W - 200Ω 100W - 100Ω Bypass - 8 Ω **70V:** 6.5W - 800 Ω 12.5W - 400 Ω 25W - 200 Ω 50W - 100 Ω 100W - 49 Ω Bypass - 8 Ω
Connectors:	4-Pin Phoenix connector
Enclosure material:	ABS resin
Suspension:	Integrated QuickSAM heavy-duty strong-arm mounting bracket
Grille:	Polyester powder coated, 18GA galvanized steel
Operational ambient temperature range:	-30° C to 45°C (-22° F to 113° F)
Ingress Protection (IEC 529):	IP55
Color:	Black or white

Dimensions (H x W x D):	451 mm x 282 mm x 263 mm (18 in x 11 in x 10 in)
Net weight:	8.4 kg (18.5 lb) without transformer 10.4 kg (23.0 lb) with transformer
Shipping weight:	10.2 kg (22.5 lb) without transformer 12.3 kg (27.0 lb) with transformer

[1]Half-space measurement.

[2]IEC Pink Noise, 6 dB Crest Factor.

Bosch Sicherheitssysteme GmbH
Robert-Bosch-Ring 5
85630 Grasbrunn
Germany
www.boschsecurity.com
© Bosch Sicherheitssysteme GmbH, 2022

Bosch Security Systems, LLC
12000 Portland Avenue South
Burnsville MN 55337
USA
www.electrovoice.com
© Bosch Security Systems, LLC, 2022

202201251737